interberg batteries

atlantic power group

SNF Series

Solar Ni-Iron batteries

Catalogue

CE-RS-17051933

MADE IN EUROPE

TÜV InterCert

ISO 9001:08 -- ISO 14001:04
OHSAS 18001:07
Certificate No.: 09-QEO-01427-TIC

Ed. 04-20180319-Rev.04

interberg batteries

NICKEL-IRON STORAGE BATTERIES

TECHNICAL FEATURES AND GENERAL CHARACTERISTICS

Interberg SNF range Nickel-Iron cells can last well over 30 years in robust service if properly maintained, while Lead-Acid cells are lucky to last 15 years in light duty.

Interberg SNF range Nickel-Iron cells are not affected by deep and frequent charge/discharge cycles unlike Lead-Acid batteries.

Interberg SNF range Nickel-Iron cells wont sulphate if left in a discharged state, unlike Lead-Acid cells.

If a Nickel-Iron cell in an ageing battery bank is found to be faulty it can be replaced with a brand new cell of the same capacity without adverse consequences. But it is not recommended you do this with individual Lead-Acid cells once the battery bank has been in use for more than 6 months.

The usual recommendation is for complete replacement of the entire Lead-Acid battery bank with brand new cells. The reason is that over their lifetime Lead-Acid batteries internal resistance increases at a steady rate while Nickel-Iron batteries internal resistance stabilizes. If you mix Lead-Acid batteries with different internal resistances they will charge and discharge at different rates which will accelerate ageing in both the older and newer batteries.

Interberg SNF range Nickel-Iron cells have a much wider operating temperature range than Lead-Acid cells.

Interberg SNF range Nickel-Iron cells have a higher self discharge rate of up to 40% a month compared to that of Lead-Acid batteries (some 5% a month) or to the self-discharge rate of the Nickel-Cadmium batteries (between 2 and 20% a month). Although theoretically disadvantageous, this is, nevertheless, not a problem in a Renewable Energy Application (solar or wind power system) or, in general, where there is regular recharging of the battery bank or the battery is equipped with an automatic re-filling system, although it will need to be taken into account in the rare case that the Nickel-Iron battery will be left uncharged for long periods.

Over-Charging will not cause damage to Interberg SNF range Nickel-Iron cells. Unlike Lead-Acid cells.

Repeatedly under charging will not cause permanent damage to Interberg SNF range Nickel-Iron cells - it may reduce their capacity but this can be restored by performing a couple of full depth charge/discharge cycles. Lead-Acid cells will suffer a permanent loss of capacity if repeatedly undercharged.

Amp-hour capacity for Interberg SNF range Nickel-Iron cells is rated over 5 hours rather than 100 or 120 hours for

interberg batteries
mirador de despeñaperros 17
28400 collado villalba (madrid)
Spain

atlantic power group

tel : 34-916263872
fax : 34-916263870
website : www.interberg.com
e-mail : info@interberg.com

Lead-Acid cells. If Nickel-Iron cells are rated over 100 hours they would measure around a 20% increase in capacity.

If any battery type is discharged slowly it gives up more amps than if it is discharged quickly.

Interberg SNF range Nickel-Iron cells can be fully charged in 5 to 7 hours without harm - unlike Lead-Acid cells.

If a generator is used to charge the batteries, this can mean less running time.

Battery capacities change over time. Brand new Interberg SNF range Nickel-Iron batteries put straight to hard work in deep discharges have a 20% lower capacity than their rating, increasing rapidly to 100% or better (in a month or so) then gradually reduce in capacity over the years to stabilize at over 70% of rated capacity. Lead-Acid batteries tend to have a lower capacity when new, increase for a few months then decrease slowly but continuously for the rest of their life.

With Interberg SNF range Nickel-Iron cells the full available capacity can be utilised when calculating battery size for solar systems. After years of use, available capacity should stabilise at about 70-80% of rated capacity. Lead-Acid batteries are always over sized in solar systems usually by 2 to 5 times to avoid deep discharging.

The charge pattern of solar panels matches perfectly with the charge pattern of Nickel-Iron cells. Because of this Nickel-Iron cells can be used in a solar system without a charge regulator. All Lead-Acid cells used in a solar system should be charged through a charge regulator to avoid damage through over charging.

The alkaline vapours given off by Interberg SNF range Nickel-Iron cells during use are not corrosive to steel. The alkaline vapour is a steel preservative. The acid vapour emitted by Lead-Acid cells corrodes steel. This may be an issue in boats.

Interberg SNF range Nickel-Iron cells are extremely robust and tolerant to vibrations and physical shocks. More so than Lead-Acid cells.

Interberg SNF range Nickel-Iron batteries can be rejuvenated by changing or cleaning the electrolyte and reconditioning the electrodes. Lead-Acid batteries have little scope for rejuvenation.

Interberg SNF range Nickel-Iron cells are 'wet and vented'. This means they have a liquid electrolyte (the electrolyte isn't jelled or constrained by a glass fibre mat) and the gasses produced during charging and discharging can escape through small vent holes in the cap - the pressure inside the cell is the same as the atmospheric pressure outside the cell. Wet and vented cells require the electrolyte to be topped

interberg batteries
mirador de despeñaperros 17
28400 collado villalba (madrid)
Spain

tel : 34-916263872
fax : 34-916263870
website : www.interberg.com
e-mail : info@interberg.com

up with distilled or demineralised water, the amount depending on the usage. 'Sealed' rechargeable batteries, whether small torch type, computer batteries or large amp hour heavy duty sealed Lead-Acid cells usually employ some mechanism (glass fibre, cloth, gelling agent etc) to restrict the movement of the electrolyte and to capture any gasses released during charging and discharging plus a pressure release valve. If charged within the recommended range, the gasses generated during charging/discharging are contained under pressure within the cell. If overcharged or over-discharged or excessively heated the pressure release valve will open and electrolyte will vent. The loss of electrolyte can leave the positive and negative electrodes partially exposed which can lead to arcing between the positive and negative plates causing the hydrogen and oxygen created during charging/discharging to explode.

Hundreds of people suffer acid burns from exploding car batteries every year. With all types of sealed batteries you have no idea of how much electrolyte is still in the cell and no way of adding more electrolyte if you could tell. With wet and vented cells whether Nickel-Iron, Nickel-Cadmium or Lead-Acid you can always remove the filler cap and see if the plates are dry and in a potentially explosive state.

A hazard with all wet vented cells whether Nickel-Iron, Nickel-Cadmium or Lead-Acid is that a flame or spark close to the vent cap can ignite the explosive hydrogen/oxygen gas vented through the cap vent holes during charging/discharging and quickly propagate down through the vent holes into the battery causing a destructive battery explosion.

Hydrogen is extremely explosive and fire travels or propagates faster in a hydrogen/oxygen mix than any other fuel. Vent caps on wet vented cells often incorporate some design features that attempt to prevent flame entering the interior of the cell.

There are a number of automatic wet vented cell watering systems being sold that allow for filling of all the battery cells in a few simple operations. They require the replacement of the original cell cap with caps that usually consist of a float mechanism and/or valve built in and a network of feeder tubes connected to a central container of distilled/demineralised water. Some require the water to be pressurised mechanically others by gravity feed. None of them allow you to simply fill the central container and leave it unattended - they all require you to disconnect the central container from the filler tubes once the electrolyte has reached the correct level - presumably the valves in the caps must leak a little which could cause the cells to be overfilled.

Another alternative is caps that incorporate an array of small plastic balls that the venting gas has to pass through. These caps can reduce the loss of electrolyte by between 50 to 80% or if you don't use them you will use between 2 to 5 times more distilled water. If they are not recombining the generated hydrogen and oxygen then it appears that a lot of the gas vented by vented wet cells must be water vapour that is being trapped and condensed by the small plastic balls.

interberg batteries
mirador de despeñaperros 17
28400 collado villalba (madrid)
Spain

tel : 34-916263872
fax : 34-916263870
website : www.interberg.com
e-mail : info@interberg.com

ENVIRONMENTAL FRIENDLY

At the end of their useful life there is no need to return Nickel-Iron cells to special recycling centres for removal of dangerous metals such as lead and cadmium. After removal of electrolyte Nickel-Iron cells can be treated as scrap steel for recycling purposes. If spent electrolyte from Nickel-Iron cells is diluted with water it can be sprayed onto acid soils. This will reduce the ph of the soil and add potassium in a form immediately available to plants. The 'technical grade' purity of the Nickel-Iron electrolyte means there will be no harmful contaminants released into the soil if used in this way.

CHEMISTRY

The cell electrodes are able to store energy obtained from an exterior charging source and to return this energy. To do this they need to be immersed in an electrolyte.

Initial active material of the positive electrode is nickel di-hydroxide $Ni(OH)_2$ and the active material of the negative electrode is ferrous di-hydroxide $Fe(OH)_2$.

The basic processes taking place in accumulators during charging and discharging can be represented with the following equation:

$$2Ni(OH)_2 + Fe(OH)_2 \underset{\text{discharging}}{\overset{\text{charging}}{\rightleftharpoons}} 2NiOOH + Fe + 2H_2O$$

During charging, the basic current-generating process of ferrous reduction will consume water and release oxygen from the negative (iron) plate, and oxidation of nickel di-hydroxide will release hydrogen from the positive (nickel) plate. During discharging, ferrous oxidation will consume water and release hydrogen from the negative (iron) plate and reduction at the positive (nickel) plate will consume water and release oxygen. Also during charging a certain amount of electrolysis of water from the electrolyte takes place, with the formation of hydrogen at the negative (iron) electrode and oxygen on the positive (nickel) electrode. The gasses produced by electrolysis have not been included in the diagram below.

A single charge/discharge process makes a cycle.

ELECTROLYTE MIXING

Technical grade potassium hydroxide or sodium hydroxide plus a small amount of lithium hydroxide dissolved in distilled water is used for the electrolyte.

Sodium hydroxide is preferable when expected operating temperatures are between +5ºC to +40°C, potassium hydroxide preferred between -15ºC to +35°C.

Distilled water at 25°C weighs almost exactly 1 kg per litre or a density of 1 gram per centimetre^3. To make up the required strength

interberg batteries
mirador de despeñaperros 17
28400 collado villalba (madrid)
Spain

tel : 34-916263872
fax : 34-916263870
website : www.interberg.com
e-mail : info@interberg.com

electrolyte, potassium hydroxide (which is usually sold as a flake or rarely as a powder) and lithium hydroxide (usually sold as a powder) are added to distilled water until the density reaches between 1.19 to 1.21 g/cm^3 at room temperature. About 270g per litre of potassium hydroxide and 20g per litre of lithium hydroxide will get close to the required density.

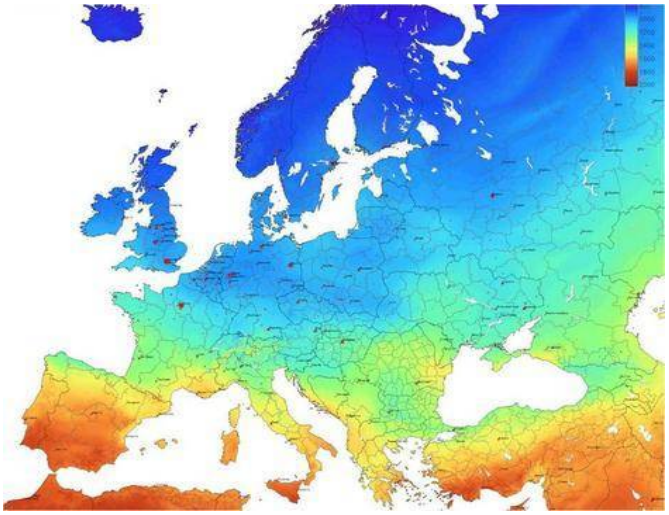

Adding the KOH (potassium hydroxide) and LiOH (Lithium Hydroxide).

The KOH is usually added first, slowly, to aid dissolution. Then, the LiOH. The addition of the KOH and LiOH will heat the water quite a lot and the electrolyte needs to be at room temperature before checking the density. When mixing large quantities, like 20 litres for example, it will take many hours to cool down. Once cooled, use a hydrometer to check the specific gravity (the density). It should be pretty close to 1.20 g/cm^3. If it's too high, add more distilled water, too low add more KOH.

Be careful when handling the chemicals and liquid electrolyte as it will eat flesh. Wear protective clothing including rubber gloves, glasses, rubber apron and protective boots. Don't leave any of your legs and arms unprotected and have a supply of water handy to wash off any splashes. It's not so dangerous if you're careful and protect yourself properly.

Plastic containers and implements for mixing are suitable. Make sure everything is clean before mixing.

APPLICATIONS AND USES

Nickel-Iron cells are currently found or have been used around the world in a multitude of industrial and private uses such as:

Railways (for locomotives, for carriages, for buffet-cars, signal lanterns, substations power supply, feeding for different auxiliary systems, power supply of control and lighting circuits).

Mining industry (for traction transport, electric locomotives, electric motors, power supply equipment, instruments, devices, mining cap lamps and portable lights, mining lanterns).

Industrial enterprises (wide range of application, for example, storage batteries and batteries for trackless electric vehicles, lifters, forklifts and as part of backup power supply equipment).

Various equipment (lighting and alarm systems, instruments, electric equipment, electric transportation vehicles (trolley-bus, tram), portable communication radio set devices and control instruments).

Electrical Vehicles (Full electrical vehicles, hybrid vehicles and electrical bikes)

Renewable Energy (Off-Grid – Stand-alone - Solar and Wind power installations)

Submarines

Water transport (barges, yachts, boats lighting and systems feeding).

interberg batteries
mirador de despeñaperros 17
28400 collado villalba (madrid)
Spain

tel : 34-916263872
fax : 34-916263870
website : www.interberg.com
e-mail : info@interberg.com

HISTORICAL BACKGROUND

The nickel-iron battery in manufacture today is only available as a wet cell of 10 to 1,000 Ah capacity. It was commercially produced by both the Swedish inventor Waldemar Jungner in Europe (who also invented the wet cell Nickel-Cadmium battery) from about 1903 onwards, and Thomas Edison in the USA from about 1906 onwards. This was about 20 years after the first commercially available Lead-Acid batteries were made. Jungner sidelined his Nickel-Iron battery a little in favour of the Nickel-Cadmium and eventually ceased manufacture of the Nickel-Iron entirely, although retained and sold Nickel-Cadmium batteries under both the NiFe and NiCad brand names. NiFe and NiCad are still registered brand names.

In 1900 there were more electric cars than internal combustion cars and Edison and Henry Ford, at one stage, were planning to make electric cars with Edison's batteries until the success of the Model T took Ford out of the picture. Apart from cars, Edison also pushed to have his Nickel-Iron batteries installed in US submarines, railway carriages, electric trucks, trams, forklifts and for storage of excess generating capacity. The Edison Battery Storage Company located in East Orange, NJ sold Nickel-Iron batteries until 1972. In 1972 the battery company was sold to the Exide Battery Corporation which discontinued making the 'Edison Cell' in 1975.

Mining, particularly in Europe, is an area where wet cell Nickel-Iron and Nickel-Cadmium batteries are used for electric locomotives, miners lamps etc.

Nickel-Iron batteries are also used for starting diesel-electric locomotives as well as for other railway rolling stock around the world. Eagle-Picher in the USA manufactured a Nickel-Iron battery for the Chrysler TeVan in 1993. They no longer make a Nickel-Iron battery. Although there are no longer any US manufacturers of Nickel-Iron batteries, there are a few large manufacturers in Europe and China. The US has traditionally been a Lead-Acid battery market while Europe a mix of Lead-Acid, Nickel-Cadmium and Nickel-Iron batteries.

WARRANTY

Interberg Batteries Ltd. warrants that these batteries are free of defects in material and workmanship for 2 years from date of purchase.

On condition that the customer complies with the installation, commissioning, operating, maintenance, storage and transportation conditions stated in the Instruction Manual, Interberg Batteries Ltd guarantees the average operational life of the batteries will be not less than 1,200 full depth cycles, where capacity from the 21st to 500th cycle will be not less than 100% of C/5 (full battery capacity discharged over a 5 hour period), from the 501st to the 1,000th cycle not less than 80% of C/5 and from the 1,001st to the 1,200th cycle not less than 70% of C/5.

Save the original purchase receipt. It is proof of when the battery was purchased.

Liability is limited to replacement of the battery according to the terms stated above, Interberg Batteries Ltd will not be responsible for any expenses for installation, electrical system tests,

interberg batteries
mirador de despeñaperros 17
28400 collado villalba (madrid)
Spain

tel : 34-916263872
fax : 34-916263870
website : www.interberg.com
e-mail : info@interberg.com

interberg batteries

charging a battery, loss of time, or other expenses which would be considered as incidental or consequential damages, or bodily injury caused by or resulting from a defect in material or workmanship.

This warranty does not cover damage to the battery caused by abuse or neglect, a failure to keep the battery properly maintained, fire, collision, explosion, freezing, or theft. The warranty shall be void if the battery has been modified, or if repairs are performed by anyone not authorized by Interberg Batteries Ltd.

This warranty shall be in lieu of any other warranties, express or implied, including but not limited to, any implied warranty of merchantability or fitness for a particular purpose.

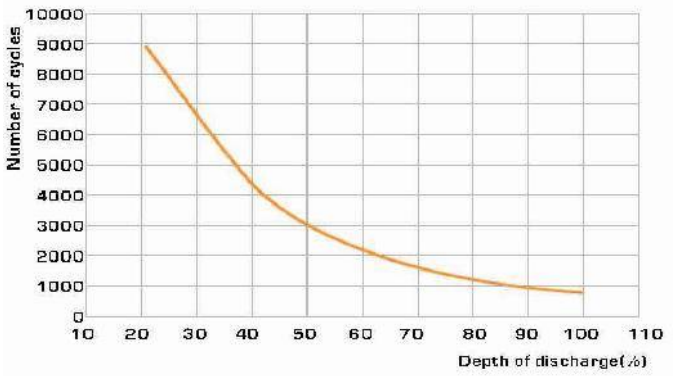

Typical cycle life versus DOD(+20℃)

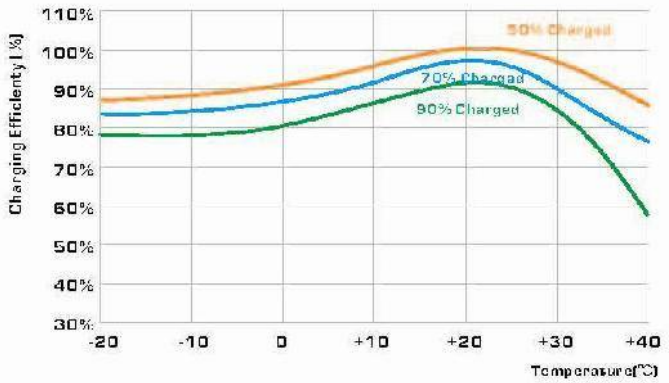

Charging efficiency as a function of temperature

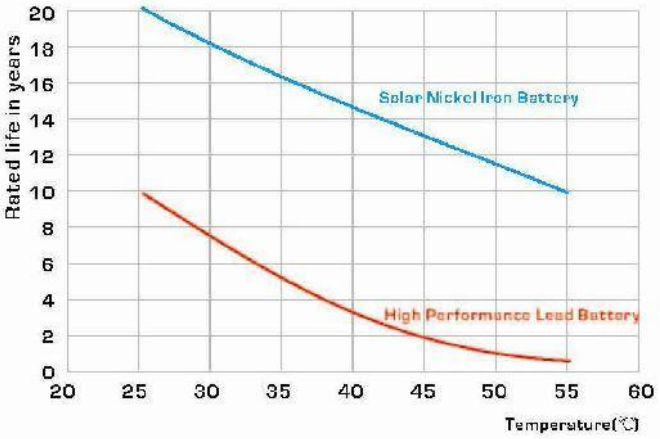

Typical battery life expected at high temperature

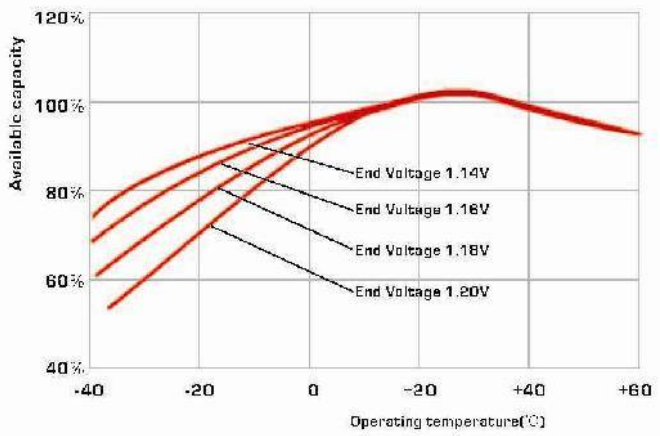

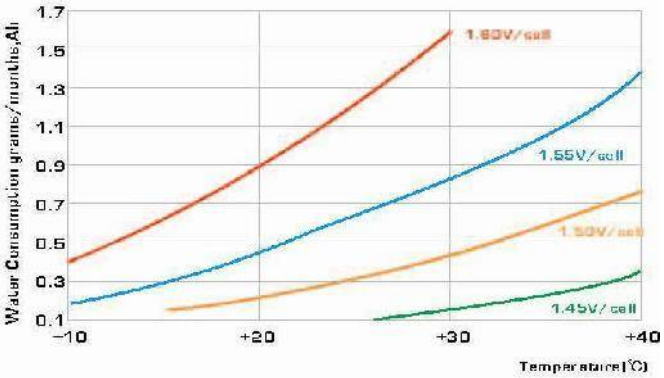

Typical Water Consumption

interberg batteries
mirador de despeñaperros 17
28400 collado villalba (madrid)
Spain

atlantic power group

tel : 34-916263872
fax : 34-916263870
website : www.interberg.com
e-mail : info@interberg.com

interberg batteries

Cell Ranges and Specifications

Renewable Energy Nickel-Iron Batteries, SNF Range

Cell Type	V	Capacity (Ah/120h) to 1.00V	Capacity (Ah/5h) to 1.00 V	Cell Length (mm)	Cell Width (mm)	Cell Height (mm)	Cell Weight (Wet)	Electr. Vol (Lit)	Type of Terminal	Cont. Material
SNF-00100	1.2	10,8	10	38	84	138	0.80	0.2	M6	MBS or PP
SNF-00200	1.2	21,6	20	32	113	220	1.2	0.3	M6	MBS or PP
SNF-00300	1.2	33,6	30	68	134	245	2.8	0.8	M10x1	MBS or PP
SNF-00400	1.2	44,4	40	68	134	245	3.0	0.8	M10x1	MBS or PP
SNF-00500	1.2	55,2	50	68	134	245	3.0	0.7	M10x1	MBS or PP
SNF-00600	1.2	66	60	70	134	285	4.2	0.9	M16	MBS or PP
SNF-00800	1.2	87,6	80	80	141	365	5.8	1.7	M10x1	MBS or PP
SNF-01000	1.2	110	100	80	141	365	6.2	1.6	M10x1	MBS or PP
SNF-01200	1.2	132	120	80	141	365	6.4	1.4	M10x1	MBS or PP
SNF-01500	1.2	166	150	106	164	345	9.0	2.5	M20	MBS or PP
SNF-02000	1.2	220	200	106	164	345	10.0	1.8	M20	MBS or PP
SNF-02500	1.2	275	250	138	276	425	17.0	4.6	2xM16	PP
SNF-03000	1.2	330	300	138	276	450	21.0	5.9	2xM16	MBS or PP
SNF-04000	1.2	440	400	138	276	490	25.0	5.9	2xM16	PP
SNF-05000	1.2	550	500	138	276	490	27.0	6.1	2xM16	PP
SNF-06000	1.2	660	600	176	291	510	38.0	9.2	2xM20	MBS
SNF-07000	1.2	770	700	176	291	510	39.0	8.4	2xM20	MBS
SNF-08000	1.2	880	800	186	398	570	59.0	17.2	3xM20	MBS
SNF-09000	1.2	990	900	186	398	570	60.0	15.6	3xM20	MBS
SNF-10000	1.2	1100	1000	186	398	570	61.0	15.0	3xM20	MBS

Note : All above Data and Figures are approximate and subject to the manufacturing tolerances. None of the data, information and/ or figures contained in this catalogue can be taken as a contractual commitment

interberg batteries
mirador de despeñaperros 17
28400 collado villalba (madrid)
Spain

atlantic power group

tel : 34-916263872
fax : 34-916263870
website : www.interberg.com
e-mail : info@interberg.com

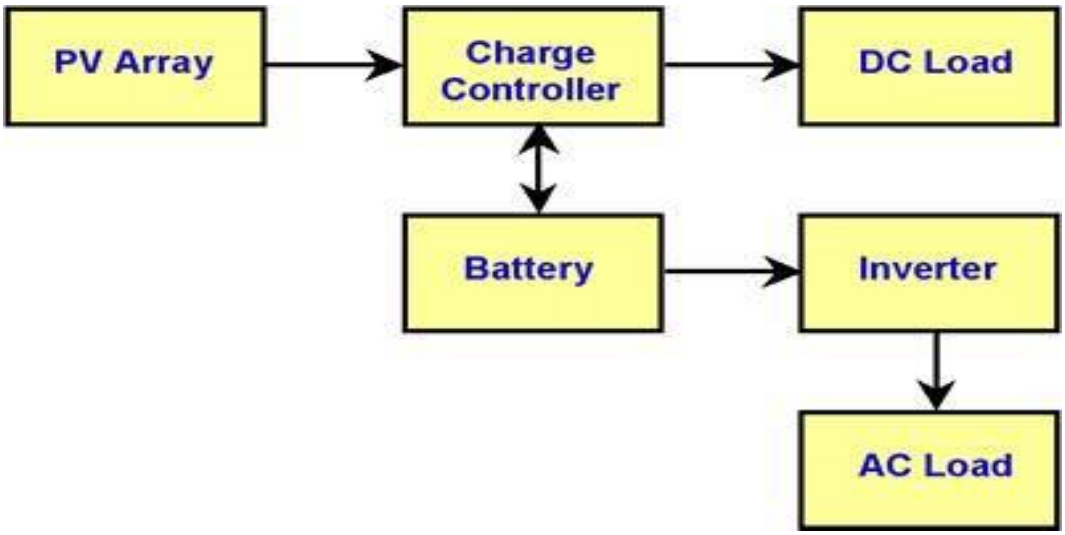

Diagram of stand-alone PV system with battery storage powering DC and AC loads.

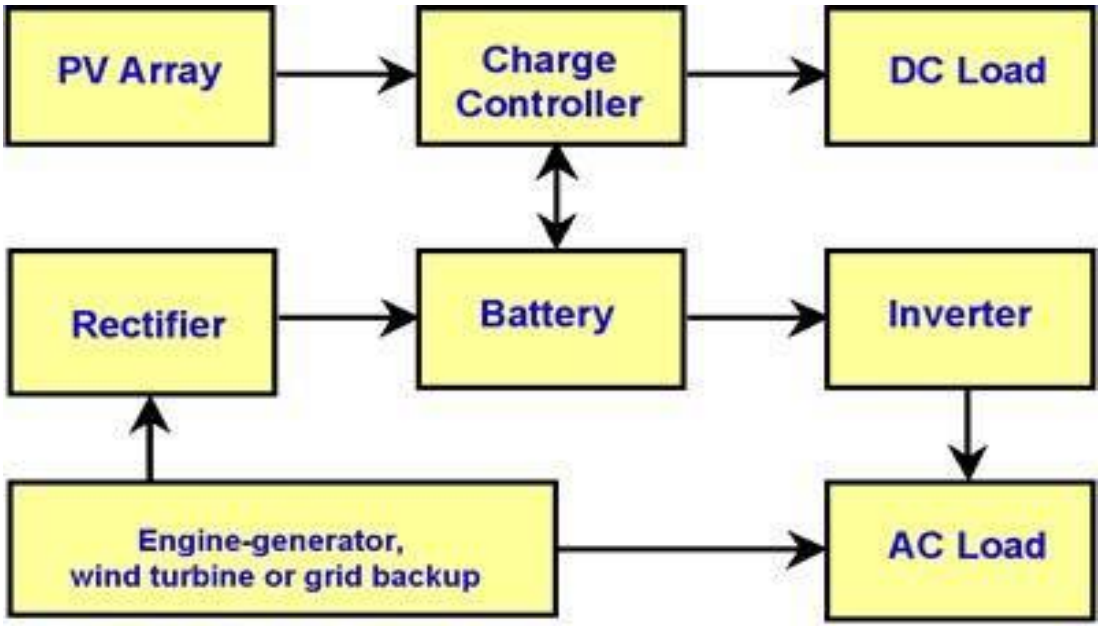

Diagram of photovoltaic hybrid system.

interberg batteries
mirador de despeñaperros 17
28400 collado villalba (madrid)
Spain

tel : 34-916263872
fax : 34-916263870
website : www.interberg.com
e-mail : info@interberg.com

interberg batteries

Interberg Batteries Ltd.
Mirador de Despeñaperros 17
28400 Collado Villalba (Madrid)
Spain
tel: 34-91-6263872
fax: 34-91-6263870
e-mail: info@interberg.com
website: www.interberg.com

atlantic power group

TÜV InterCert

ISO 9001:2008 - ISO 14001:04 - OHSAS 18001:07
Certificate No. 09-QEO-01427-TIC

an ATLANTIC POWER GROUP company

Mexico - Sao Paulo - Madrid - Istanbul - Kuwait - Hong Kong - Melbourne